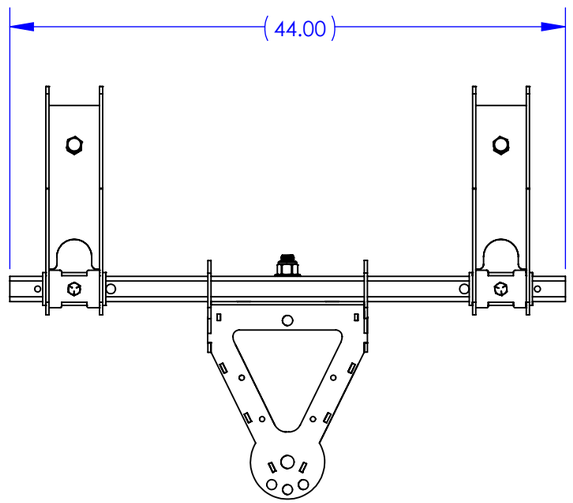

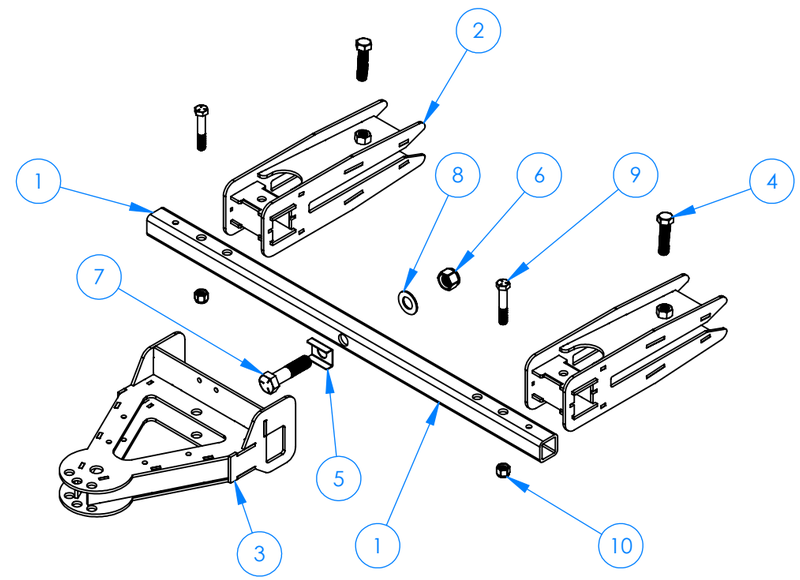

ITEM NO.	PART NUMBER	DESCRIPTION	QTY.
1	11546-01	Cross Tube	1
2	10944-91	Bucket Mount	2
3	10944-92	A Frame Weldment	1
4	91309A847	3/4" x 3" Hex Bolt Full Thread	2
5	10944-26	Channel Washer	1
6	95615A320	1"-8 Nylon-Insert Locknut	1
7	91247A920	1"-8 x 4" Hex Bolt Grade 5	1
8	90126A038	1" Zinc-Plated SAE Washer	1
9	91247A808	5/8"-11 x 3.5" Hex Bolt Grade 5	2
10	95615A250	5/8"-11 Nylon-Insert Locknut	2

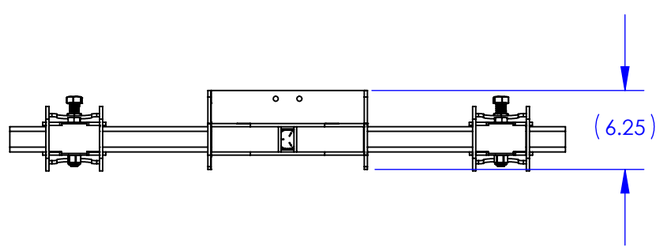

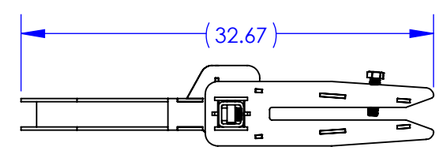

Notes:
1. Assemble As Shown
2. Powder Coat Item 1 11546-01
   60% Gloss Black

PROPRIETARY AND CONFIDENTIAL

THE INFORMATION CONTAINED IN THIS DRAWING IS THE SOLE PROPERTY OF Extreme Metal Products, LLC. ANY REPRODUCTION IN PART OR AS A WHOLE WITHOUT THE WRITTEN PERMISSION OF Extreme Metal Products, LLC IS PROHIBITED.

REVISION NOTES

Add Hardware

UNLESS OTHERWISE SPECIFIED:

DIMENSIONS ARE IN INCHES
TOLERANCES:
FRACTIONAL ± 1/16
ANGULAR: MACH ± BEND ±
TWO PLACE DECIMAL ±.03
THREE PLACE DECIMAL ±.005

INTERPRET GEOMETRIC TOLERANCING PER:

MATERIAL

FINISH

DO NOT SCALE DRAWING

	NAME	DATE
DRAWN	CLF	12/9/2025
CHECKED		
ENG APPR.		
MFG APPR.		
REVISION	CLF	1/8/2026

COMMENTS:

Extreme Metal Products, LLC
4730 Briar Rd. Cleveland Oh. 44135

TITLE:

Plow Mount Front Loader

SIZE B | DWG. NO. 10944-90 | REV A

SCALE: 1:12 | WEIGHT: 81.6 | SHEET 1 OF 1